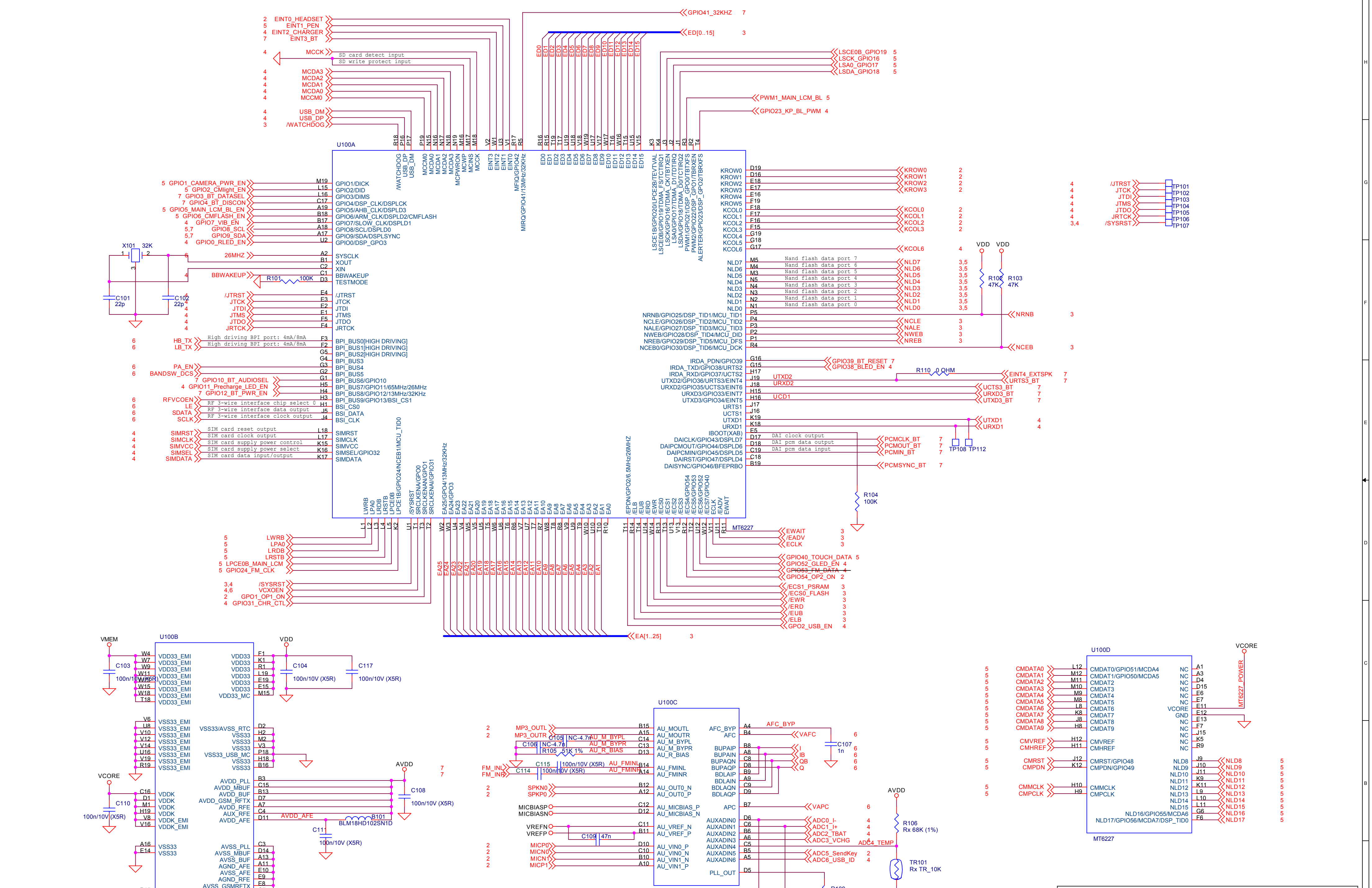


# MT6227 Phone Reference design

Title: MT6227

| Size | Document Number | Rev |
|---|---|---|
| A3 | | |

Date: Friday, November 11, 2005 — Sheet 1 of 7

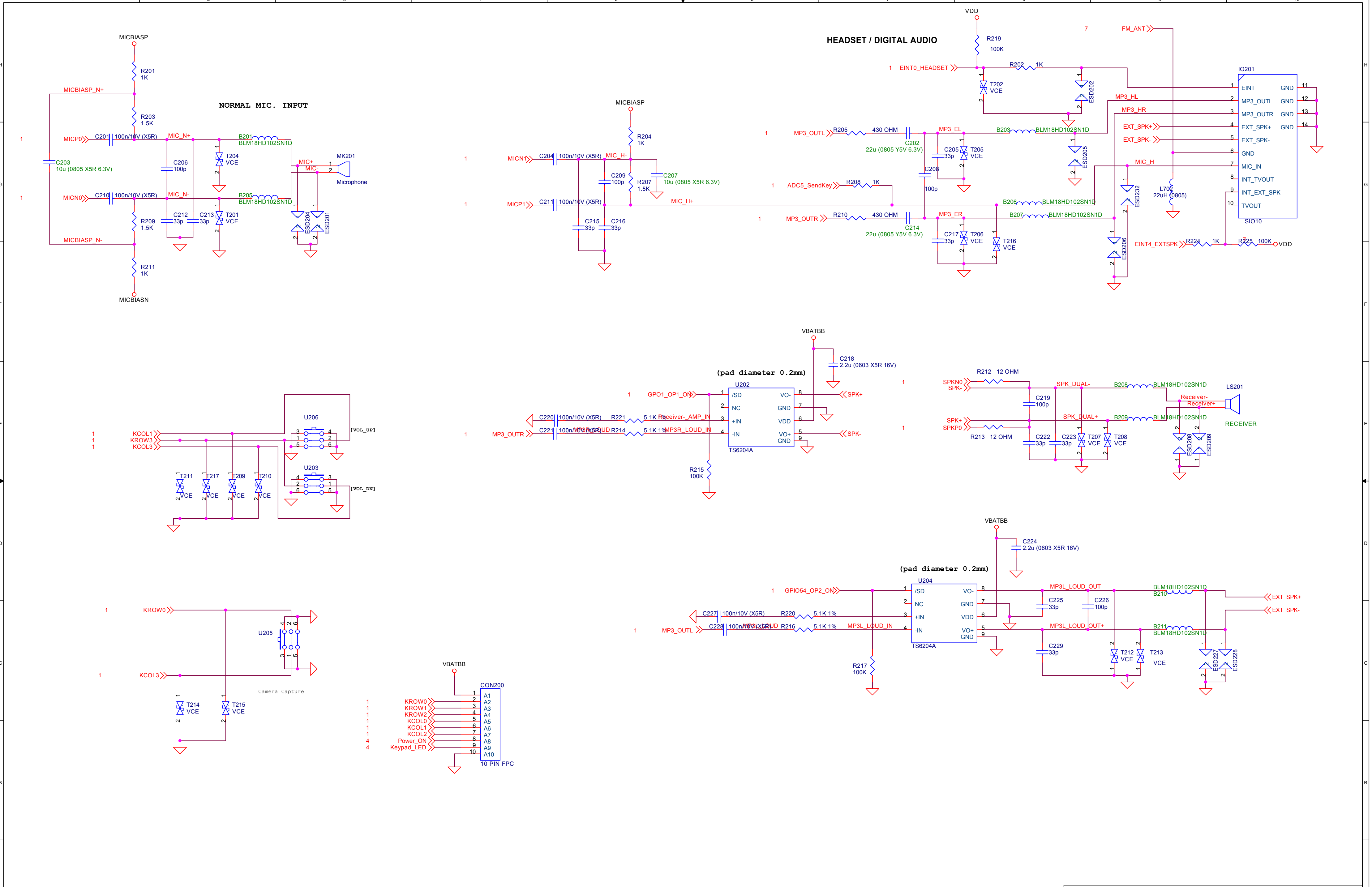


# MT6227 Phone refernece design

Title: *Audio, Keypad*

| Size | Document Number | Rev |
|---|---|---|
| A3 | | |

Date: Friday, November 11, 2005 — Sheet 2 of 7

# Renesas 3in1 SuperAND

## VMEM of Renesas = 2.8V

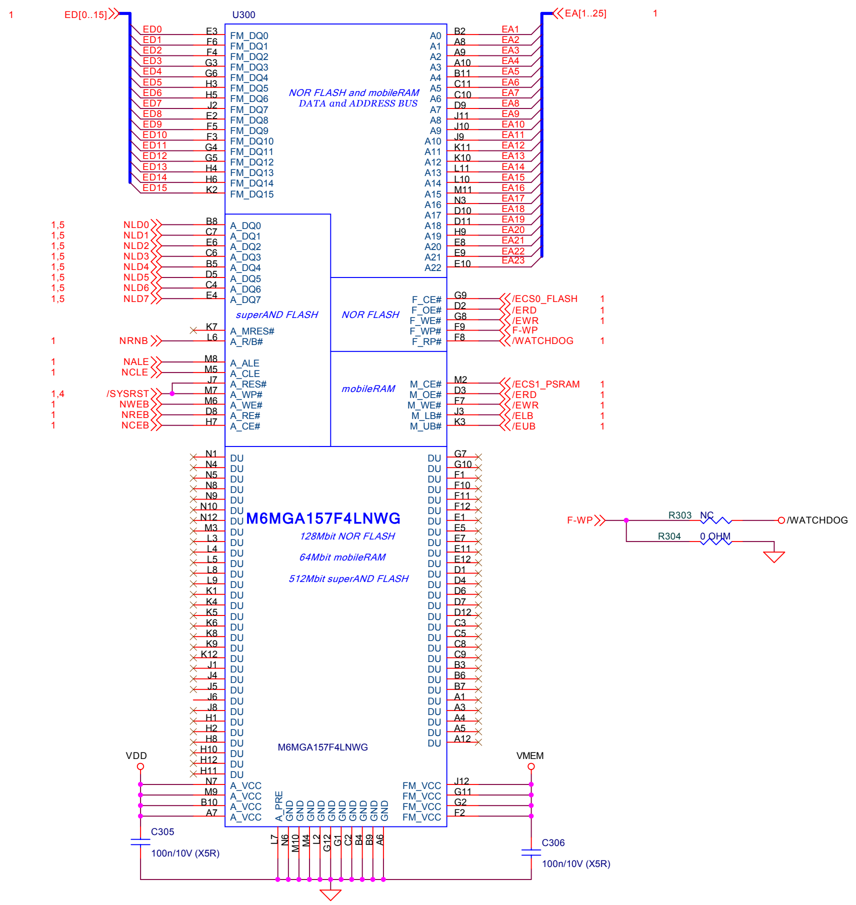


| | |
|---|---|
| | **MT6227 Phone refernece design** |
| Title | 3in1 SuperAND |
| Size A3 | Document Number |
| Rev | |
| Date: | Friday, November 11, 2005 |
| Sheet | 3 of 7 |

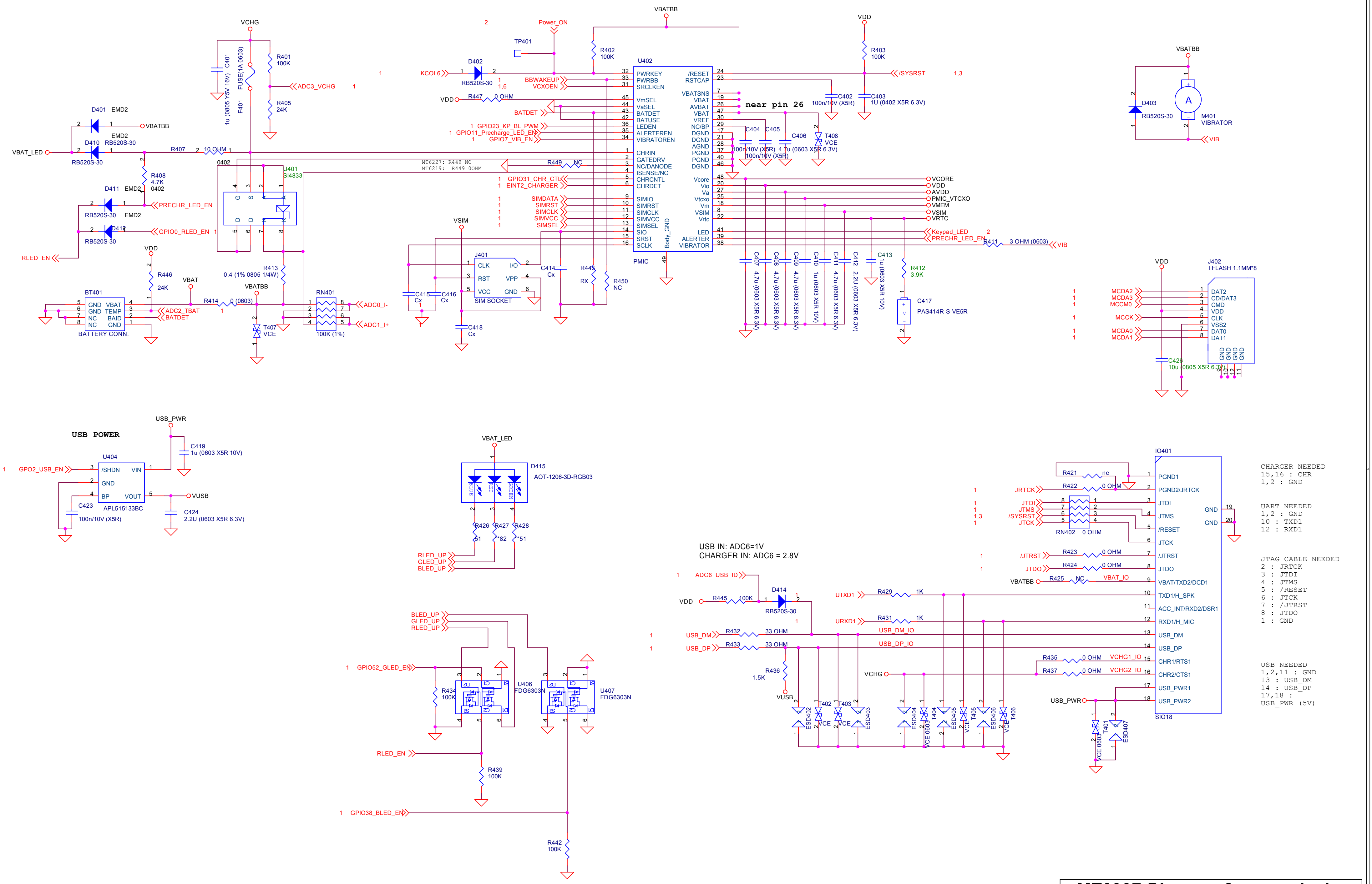


# MT6227 Phone refernece design

Title: Power, IO, T-flash

| Size | Document Number | Rev |
|---|---|---|
| A3 | | |

Date: Friday, November 11, 2005 Sheet 4 of 7

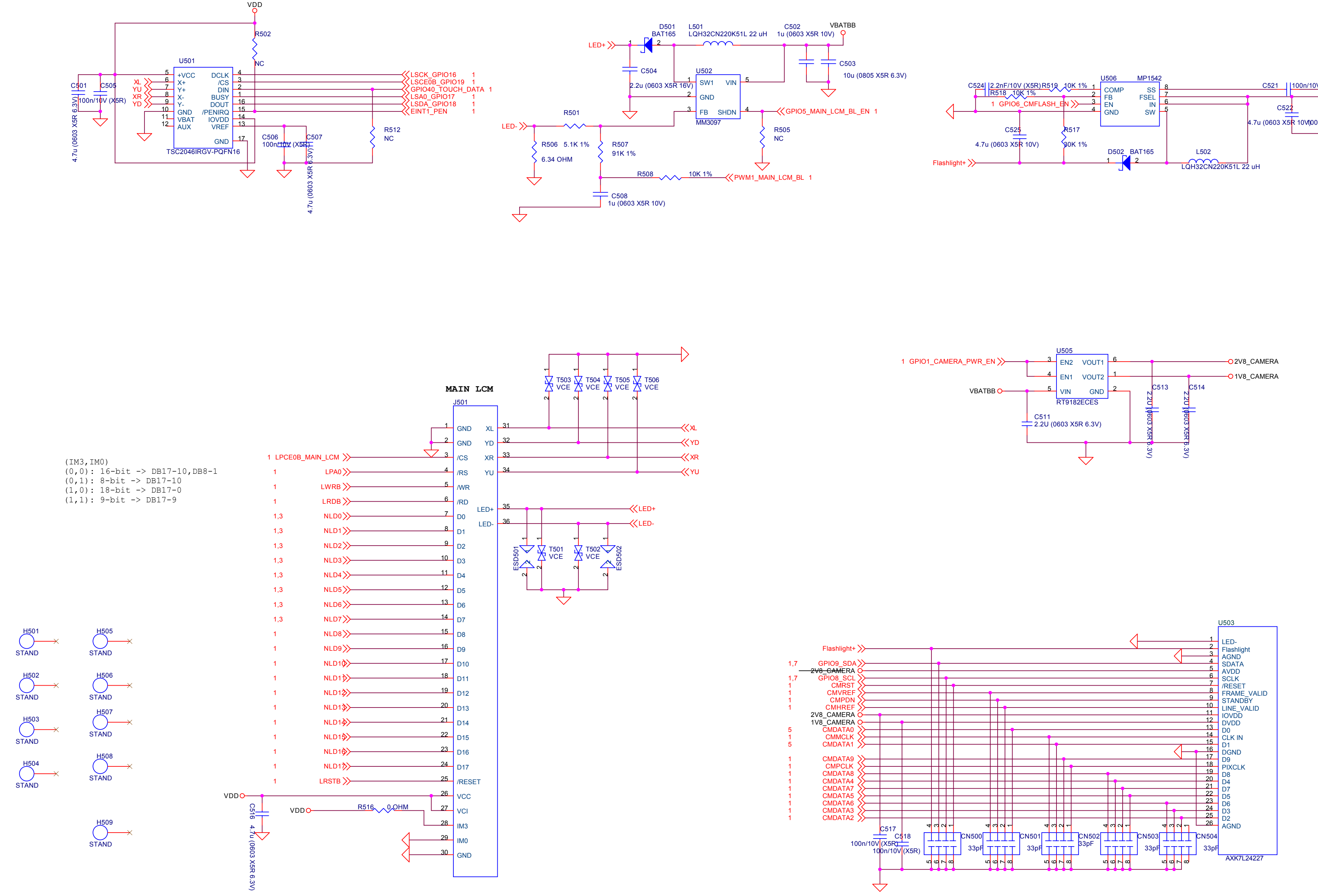


| | |
|---|---|
| **MT6227 Phone refernece design** | |
| Title | LCM, CMOS Sensor, Flash light |
| Size A3 | Document Number <Doc> — Rev |
| Date: Friday, November 11, 2005 | Sheet 5 of 7 |

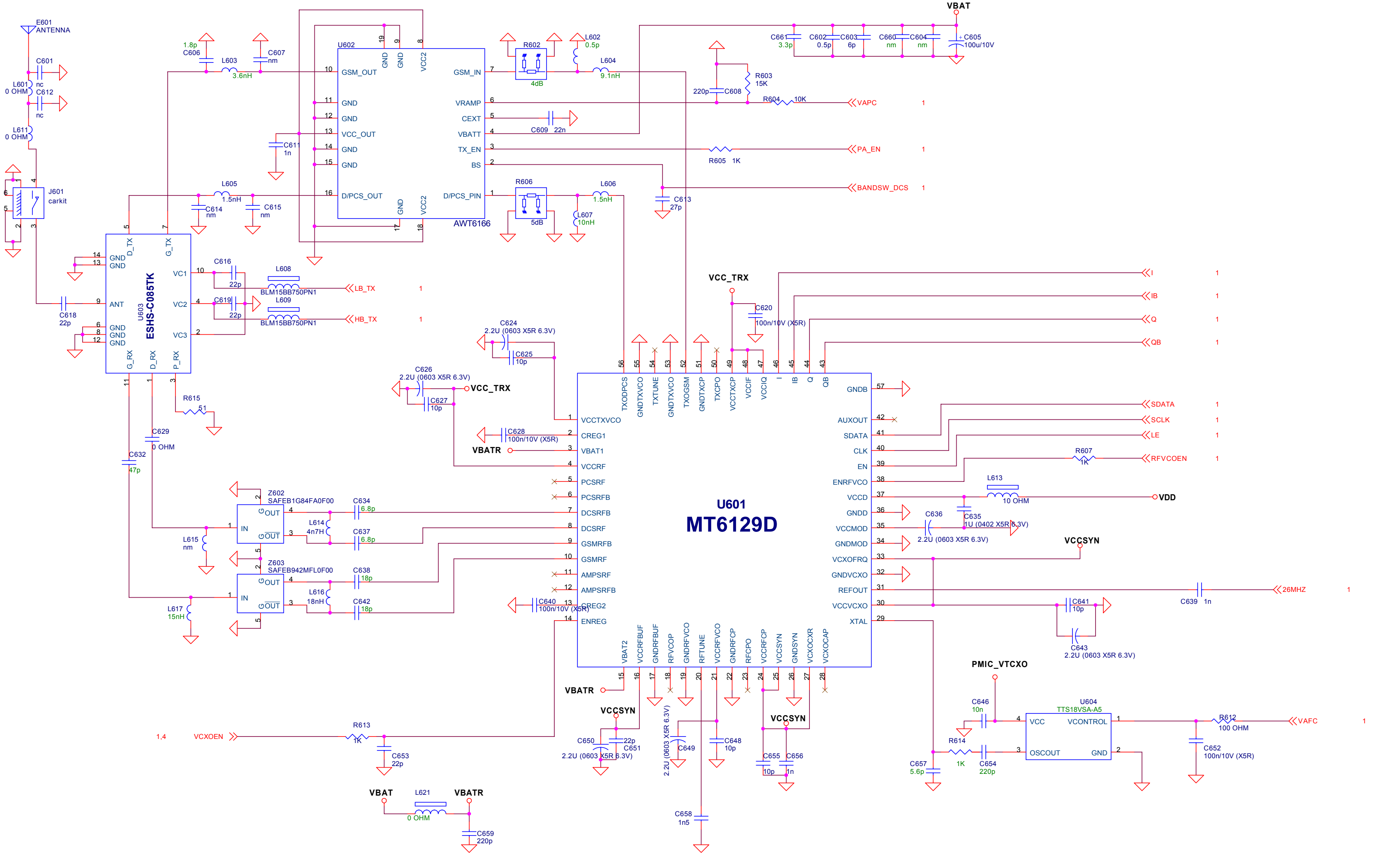


| | |
|---|---|
| ***MT6227 Phone refernece design*** | |
| Title | MT6129 RF |
| Size A2 | Document Number | Rev 1.0 |
| Date: Friday, November 11, 2005 | Sheet 6 of 7 |

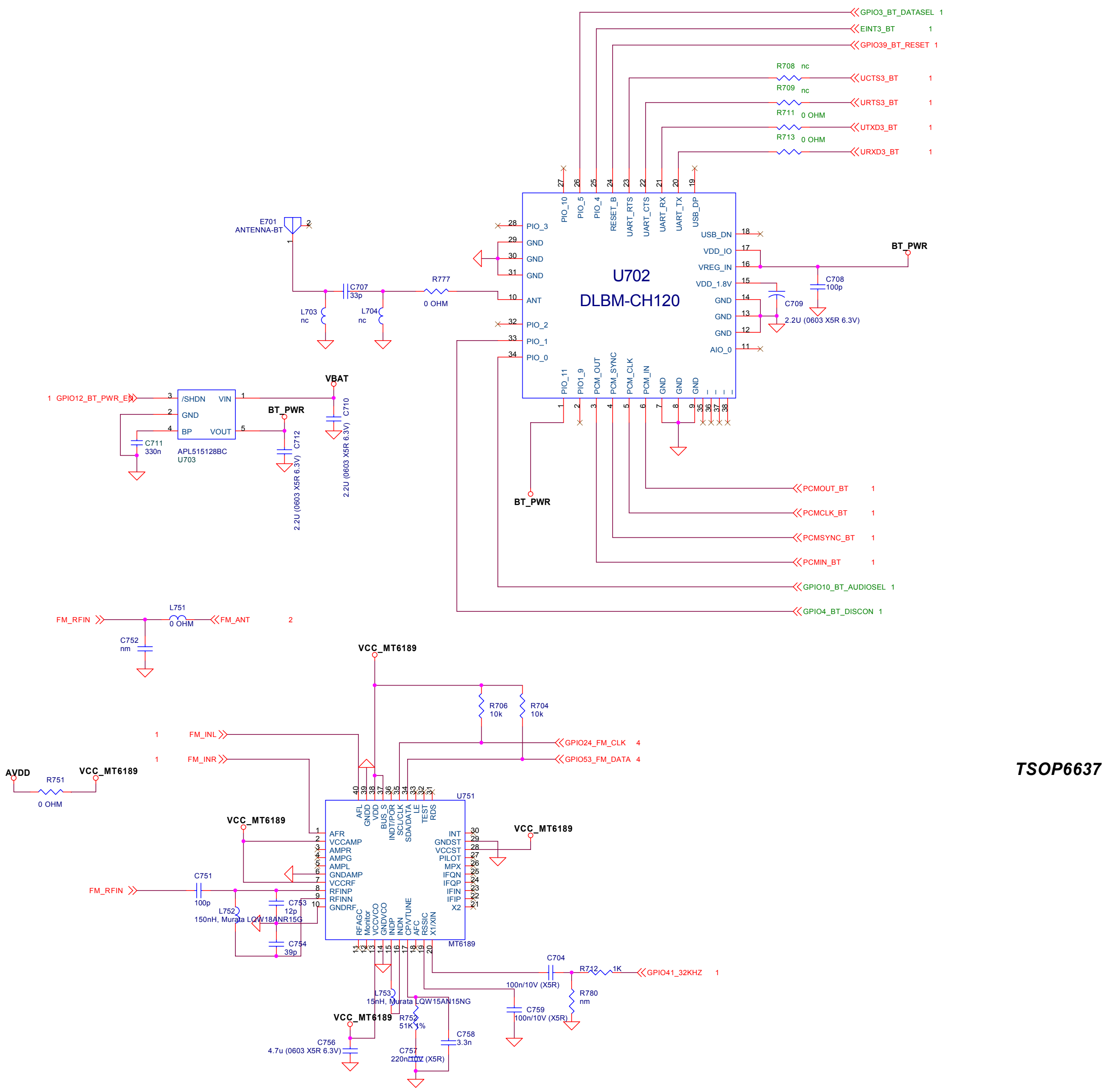


**MT6227 Phone refernece design**

| | | |
|---|---|---|
| Title | FM, Bluetooth | |
| Size A2 | Document Number <Doc> | Rev 1.0 |
| Date: Friday, November 11, 2005 | Sheet 7 of 7 | |